Bridge Rehabilitation Requirements

1. GENERAL BRIDGE REHABILITATION REQUIREMENTS

For non-interstate route overpassing bridges that are retained, the "required bridge rehabilitations" provided herein and indicated in Table 1 are the minimum requirements. The Contractor is responsible for making an independent determination on structure needs for rehabilitation, quantifying all required rehabilitation, and submitting proposed rehabilitation to SCDOT for approval.

All bridge rehabilitation shall comply with the requirements of the Technical Provisions and Chapter 23 of the SCDOT Bridge Design Manual (BDM). The Contractor is responsible for submitting an updated load rating for all retained bridges per SCDOT's Load Rating Guidance Document and applicable Load Rating Technical Notes.

2. BRIDGE DECK REPLACEMENT / REPAIR AND OVERLAY

Decks requiring replacement are included in Table 1. Decks being retained but repaired are also included in Table 1. Additional bridges may require deck maintenance in accordance with TP 1000, Special Provisions Section 104.

SCDOT has performed a deck evaluation on Asset ID 7937 (S-40-31 (Bush River Road) over I-26). Quantities associated with the anticipated repairs, if this bridge is not replaced as part of the Contractor's Work, are included in Table 4. The evaluation report is included in Appendix A.

Mechanical scarification of existing decks is limited to the top 1" of the deck.

Staging of the deck repairs shall be set up such that no load (traffic loading, construction loading, barrier wall, etc.) is placed within a bay/beam space that has any portion of the deck removed.

Full-depth deck repairs are not anticipated. The Contractor shall notify the RCE if condition of concrete may warrant a full depth repair for investigation. If the depth of a partial deck repair is greater than half of the thickness of the concrete deck, a full depth repair may be needed.

2.1 Partial Deck Repairs with Overlay

Bridge deck repairs for spalling or delaminated concrete deck shall be in accordance with Section 702.3.11 of the SCDOT Standard Specifications, except as modified herein, or with Section 726 of the SCDOT Standard Specifications and TP 1000, Special Provisions Section 726, except as modified herein. Cracks shall be repaired in accordance with Section 702.3.10 of the SCDOT Standard Specifications, except as modified herein. Repair cracks greater than 1/8" wide using an injected epoxy adhesive, meeting the requirements of ASTM C881.

For bridge decks requiring partial depth latex modified concrete (LMC) deck repair and overlay, see TP 1000, Special Provisions Section 726. Use LMC for partial depth repair areas and place at the same time as placement of the LMC overlay. The depth of a partial

deck repair shall not exceed half the depth of the existing deck and shall be determined during the execution of the Work.

Replace all reinforcing steel damaged during concrete removal. Provide uncoated reinforcing steel in accordance with the SCDOT Supplemental Specification for Reinforcing Steel. After blast cleaning and prior to concrete placement, paint the existing concrete sides of the patch with a SCDOT approved, moisture insensitive epoxy bonding compound conforming to Section 702.3.9 of the Standard Specifications and ASTM C881.

2.2 LMC Overlay Only

Place LMC overlay to restore the original deck grade and cross-slope in accordance with Section 726 of the Standard Specifications and TP 1000, Special Provisions Section 726. LMC is the only allowable overlay type. A LMC overlay shall also be placed on portions of bridge decks where no partial depth deck repair is being performed. The depth of the LMC overlay shall be a minimum of 1½".

2.3 Full Depth Deck Replacement (if necessary)

Where full-depth deck repairs are required by the RCE, use either LMC or Class 4000 concrete from the bottom of existing deck to the bottom limit of hydro-demolition. Full depth replacement is required if deteriorated concrete is discovered at a depth over half of the thickness of the deck. Use LMC overlay for the remainder of the deck.

2.4 Bridge Deck Drainage

At any existing bridge where deck repairs are performed and deck drains are to remain in the existing location, form sloped recess at deck drain locations as shown in the drain details on existing plans. Repair or replace damaged deck drain components.

As necessary for retained drain locations at any existing bridge that is retained, modify or add closed drainage system to prevent free-falling discharge from spilling onto the new shoulders, lanes, or onto concrete barrier walls.

Any new components of the bridge drainage systems shall comply with the requirements of the TP Section 700.3.1.15.

Where existing drains are abandoned due to widening of the bridge or eliminating the drain location, remove the drainpipe and surrounding concrete as necessary and perform full depth concrete patch as described in section titled “Bridge Deck Repair” in this TP Attachment.

3. JOINT REPLACEMENT

Full joint replacement will consist of complete replacement of all joint hardware in conjunction with the specified deck repairs and sidewalk retrofit. Concrete removal, new concrete, adhesive anchors and reinforcing steel are to be accounted for in the full joint replacement. Provide a joint opening and type in accordance with the BDM and SCDOT Structural Drawings and Details to accommodate movements as required by the BDM Section entitled “Design Thermal Movement” based on the bearing arrangement in the final proposed condition of the bridge.

4. BRIDGE JACKING

To meet vertical clearance requirements in accordance with TP Section 200.3.5, the superstructure spans may be vertically jacked and supported while additional height is added to the existing concrete abutments and bents. The bridge shall not be jacked more than 1/2" at a time without shimming temporary supports under the girders. The jacking operation shall limit horizontal movements to 1/4" unless otherwise approved by the Engineer. Do not allow differential vertical movement between the ends of each span to exceed 1/8”.

New bearings (see Section 5) shall be placed under each end of the existing beam at each bearing location during the jacking operations. Existing reinforcement may be cut as required to perform jacking operations and placement of the new bearings on the cap additions.

4.1 System Design

Design the jacking system and the cap additions in accordance with current AASHTO LRFD Bridge Design Specifications, the SCDOT Bridge Design Manual, current FHWA guidelines, and AASHTO guide specifications. All associated jacking loads, including but not limited to unfactored vertical service loads, horizontal loads, wind loads, and friction forces due to temperature changes, must be accounted for in the jacking design.

Factor the loads in accordance with applicable governing load combinations and ensure that all components of the jacking and temporary support system are not overstressed and are stable for all combinations of loads.

In accordance with Section 725, the Contractor shall submit design calculations and detail drawings of the proposed jacking operation and temporary support system, signed and sealed by a South Carolina registered Professional Engineer, to the Department or its Representative for review and acceptance at least 21 workdays prior to the commencement of the applicable work.

The jacking plan shall include:

A. Work required to be completed prior to the jacking operation being performed. This includes installing temporary supports, additional stiffeners, bearing plates, and any other additional components necessary for the jacking operation, as well as any applicable structural modifications shown on the contract drawings.
B. Written narrative describing the jacking procedure, including the method and sequence of jacking, and when work is to be performed. Specific installation procedures and testing requirements are to be included as part of the submittal.
C. Sketches of all necessary components of the jacking system including the size and capacity of the jacks to be used. Include catalog cuts of any manufactured products which clearly state the capacity, strength, safe working load, allowable working stresses, etc., for that product or material.
D. Calculations performed, drawings sealed and signed by a South Carolina registered Professional Engineer showing that all components of the temporary support, jacking system, and existing structures including girders, superstructure and substructures are not overstressed and are stable for all combinations of loading.

E. Include in these calculations the effect of wind and all other transverse and longitudinal forces on the structure. Ensure that any rotational effects of the superstructure are accounted for.
F. Include all material properties, design loads, and design assumptions in the design calculations.
G. Provide for expansion and contraction of the girders while supported by the jacking assembly for a minimum temperature range of not less than 40°F. Account for forces that develop in all components due to thermal movement of the superstructure.
H. Clearly state in the calculations if any existing structural members are to be used as temporary supports or jacking locations. Inspect existing structural members that are to be used for jacking or temporary support and make any required repairs prior to performing jacking. Repairs specified as part of this contract to existing structural members in the vicinity of jacking locations must be completed prior to performing jacking.
I. Design and install modifications to the existing structure as necessary to accommodate all loads imposed during jacking and while the structure is in the raised position. Show all assumptions and references clearly.
J. If post-installed anchors are necessary, perform a capacity check by comparing the service load to the maximum safe working load of the anchor. Ensure the maximum safe working load of the anchor to be the lesser of 25% of the ultimate strength and the safe working load provided by the manufacturer.
K. Completed detail drawings sealed and signed by a South Carolina registered Professional Engineer, that include all design dimensions, limits of work, elevations, materials, member sizes, and the proposed construction sequence.

4.2 Jacking Construction

Ensure that this work is performed under the supervision of a South Carolina registered Professional Engineer. The Professional Engineer must seal and sign all documents and provide certification that the temporary supports have been installed in accordance with the approved system.

Provide jacks with a minimum rated capacity of one and one-half times the calculated jacking loads. The rated capacity of each jack is to be clearly shown on the manufacturer's name plate. Submit calibration certificates for the jacks indicating calibration within six months of the performance of the jacking operation.

Size the jacks to carry the dead load of the structure plus the anticipated live load during construction. Since bridge is to be raised for a duration longer than six hours, use temporary supports in addition to jacks. Jack all beams simultaneously in a manner that prevents permanent deformation and/or structural damage to the existing bridge components or any appurtenances attached to the bridge. Utilize temporary asphalt as necessary to limit the vertical elevation difference while bridge is elevated on jacks.

5. BEARING REPLACEMENT

All existing bearings shall be replaced with elastomeric bearings and sole plates in accordance with the BDM Section titled "Bearing Assemblies" unless otherwise directed in this section. The Contractor shall identify which types of bearings are to be installed for

SCDOT approval. Pot bearings may be required to limit lateral loads on existing substructures. For a height difference between existing and proposed bearings less than 6 inches, the difference in height can be accommodated with extra thick sole plate(s) between the top of concrete beam seat and the bearing. For height differences greater than or equal to 6 inches, use plates or a steel column comprised of an HP or similar steel section and place reinforced concrete to extend the concrete beam seat up to the bottom of the elastomeric bearing. Existing anchor bolts may be used if design allows; confirm size location and condition of existing anchor bolts prior to incorporating into the design. If new anchor bolts are required, cut off existing anchor bolts and provide new anchor bolts sized in accordance with the BDM and attached to existing concrete in accordance with the requirements for adhesively bonded anchors in the TP Section 1000 Special Provisions.

Submit shop drawings for the bearings and bearing assembly hardware in accordance with requirements of this Technical Provision Attachment.

Bridge end walls should be chipped as necessary to remove existing bearing assemblies including room to fully remove metal shims and the bearing plates that may be welded to the existing girder and to install new bearings. If portions of the end walls were removed, the exposed concrete shall be patched according to the following procedure.

A. Remove all grease, dirt, oil, or foreign material from the patch areas by blast cleaning. Immediately before placing patching material, remove all dust, sand, and blasting debris with oil-free compressed air.
B. Apply an SCDOT approved rust inhibitor to all exposed reinforcing steel. Ensure that the exposed concrete surface is clean and dry. Apply inhibitor in accordance with manufacturer's recommendations.
C. Apply an SCDOT approved epoxy mortar/concrete patch in accordance with ASTM C881. Fill all voids. The material used shall be rated for vertical and overhead use.
D. Apply an SCDOT approved epoxy surface sealer to the perimeter of the patch area.

Where new bearings result in loadings on the substructures that are inconsistent with the conditions considered in the original design, perform design calculations to verify the adequacy of the existing substructure and foundation.

The Contractor shall verify the geometry of the new bearing assemblies, including thermal expansion requirements. If necessary, a reinforced concrete corbel shall be installed to extend the bearing area. The corbel shall be designed in accordance with AASHTO LRFD 5.8.4.2. If necessary, vertical chipping may be required to accommodate the new bearing assembly. If needed, a high strength, fast set, non-shrink, non-metallic grout shall be used. The grout shall be factory-packaged, nonstaining, noncorrosive, nongaseous grout complying with ASTM C1107. The grout shall contain a blend of selected Portland cements, plasticizing/water-reducing admixtures and shrinkage compensating agents. The shrinkage agents shall compensate for shrinkage in both the plastic and hardened states. The grout shall meet the following minimum material properties:

A. Compressive strength at 28 days (ASTM C942): 11,000 psi
B. Bond strength (ASTM C882): plastic grout to hardened concrete
    a) At 28 days: 2,500 psi.
    b) At 1 day: 1,800 psi.
C. Grout material must be suitable for grouting level pads.

D. Final set shall occur within 1 hour.

6. SUPERSTRUCTURE REPAIR

Minimum quantities of superstructure repairs are included in Table 3.

6.1 Painting of Structural Steel

Clean and paint all steel girders, diaphragms/cross frames, and bearings (where specified) in their entirety. Comply with Section 710 of the Standard Specifications and TP Section 1000 Special Provisions. Comply with all required regulations and/or guidelines associated with the presence of lead containing paints, if present.

6.2 Inspection/Repair of Structural Steel Splices

Inspect all steel girder splices and replace all loose bolts in connections. Replace each loose bolt assembly one at a time unless directed otherwise by the IQM. Make new bolted connections with 7/8" diameter ASTM A325 bolts unless otherwise indicated. Use DTIs and place hardened washers under DTIs. Install hardened washer under the element turned for each bolt of a bolted connection. Prior to performing work, provide a report summarizing the inspection which indicates which bolts will be replaced for SCDOT concurrence.

6.3 Heat Straightening

Damaged bridge members shall be realigned by heat straightening and may use the concurrent application of auxiliary mechanical means. All heat straightening shall be performed by an approved company and supervised by a Professional Engineer or Heat Straightening Specialist who is thoroughly familiar with and experienced in heat straightening. Provide a work history of previous successful heat straightening repair projects on structural steel of a similar nature, listing the project, owner, and contact references. All repairs shall be done in accordance with the SCDOT Standard Specifications.

A detailed heat straightening and repair procedure shall be submitted to and approved by SCDOT prior to the start of work. The heat straightening procedure shall be prepared in accordance with FHWA report no. FHWA-IF-99-004, "Heat Straightening Repair of Damaged Bridges" as modified by the NCHRP Report 604 "Heat Straightening Repair of Damaged Steel Bridge Girders: Fatigue and Fracture Performance." The procedure shall include, but is not limited to, calculations of stresses resulting from the applied external jacking loads used in the straightening operations; the approximate locations to which heat shall be applied; heat patterns and sequences proposed; general sketches of jacking system to be used; welding procedures; and MT and UT procedures.

The heat applied shall be between 700□ and 1150□ F, and the temperature shall be monitored by the use of contact thermometers, pyrometric sticks, or temperature indicating crayons. The maximum torch tip size shall be 1-inch diameter. Heat straightening shall be accomplished through the application of V-heat, line heat, or spot heat patterns. The base of a V-heat pattern shall not exceed 10 inches, and the angle

formed at the apex shall not exceed 20 degrees. Heating shall be performed in such a manner that the only location showing a dull red color shall be directly under the torch tip. Heating shall start at the apex of the V-heat pattern and progress to the base. A heat pattern shall not be reheated until the area has cooled completely. Heat straightening operations may be assisted by the use of external pre-loading jacking devices. The forces applied through these jacking devices shall be limited such that the stresses in the member prior to heating operations do not exceed 24 ksi for A373 and A7 steels, 27 ksi for A36, 33 ksi for A94, and 37 ksi for Grade 50 steels. Protect structural steel from jacking loads with hardwood blocking, bracing, etc. cut to fit, or distribution angles, plates, flat plate come-along hooks, etc.

Final straightness tolerances for plate girders shall meet the straightness requirements in the current edition of the AASHTO/AWS D1.5 Bridge Welding Code, and the final straightness tolerances for rolled beams shall meet straightness requirements in ASTM A6 “Standard Specifications for General Requirements for Rolled Steel Plates, Shapes, Sheet Piling and Bars for Structural Use".

Appropriate sketches, notes and photos shall be prepared to describe the repair at each location in the structure. These records shall be submitted to the RCE at the completion of the project.

7. SUBSTRUCTURE REPAIR

Perform crack and spall repair in accordance with standard specifications and the repair notes below.

Concrete crack repairs in reinforced concrete substructure elements are required if cracks are over 1/4" in width (regardless of crack length) or if cracks are over 0.012” in width and over 6’ in length. Concrete spall repairs in substructure elements are required if the surface area of the existing spall or delaminated area is over 5 square feet or if the spall is over 1” deep and/or has exposed reinforcement (regardless of spall area). Deficiencies in the reinforced concrete substructure elements shall be assessed and measured by a Professional Engineer with hands-on access to the bridge element and confirmed by the RCE.

Concrete crack repairs in prestressed concrete substructure elements are required if cracks are over 0.009" in width (regardless of crack length) or if cracks are over 0.004” in width and over 6’ in length. Concrete spall repairs in substructure elements are required if the surface area of the existing spall or delaminated area is over 5 square feet or if the spall is over 1” deep and/or has exposed reinforcement (regardless of spall area). Deficiencies in the prestressed concrete substructure elements shall be assessed and measured by a Professional Engineer with hands-on access to the bridge element and confirmed by the RCE.

Standard Repair Notes:

A. Outline the defective areas and verify depth of concrete cover over reinforcing steel. Saw-cut the outlined areas to a minimum depth of 1 ½”, if possible, without cutting any reinforcing steel.
B. Remove all defective and/or delaminated concrete in the outlined areas by use of jackhammers. Limit the maximum size of jackhammers to 15 pounds. Do not

damage the vertical sides of the saw-cut during removal. Be careful not to damage any existing reinforcing. Replace all reinforcing steel damaged during concrete removal as part of the repair.

C. Remove concrete to a depth of no less than 1" behind the existing reinforcing steel.

D. Remove all grease, dirt, oil, or foreign material from the patch areas by blast cleaning. Immediately before placing patching material, remove all dust, sand, and blasting debris with oil-free compressed air.

E. Apply an SCDOT approved rust inhibitor to all exposed reinforcing steel. Ensure that the exposed concrete surface is clean and dry. Apply inhibitor in accordance with manufacturer's recommendations.

F. Apply an SCDOT approved epoxy mortar/concrete patch in accordance with ASTM C881. Fill all voids. The material used shall be rated for vertical and overhead use.

G. Apply an SCDOT approved epoxy surface sealer to the perimeter of the repaired area.

Minimum lengths of crack repairs and minimum areas of spall repairs for substructures are included in Table 2.

8. APPROACH SLABS

8.1 Approach Slab Replacement

On structures where superstructure is being raised, the existing approach slab will be removed, and a new approach slab will be constructed after the superstructure is raised. Any undermining and voids shall be filled, and the Contractor shall re-establish the expansion joint between the superstructure and approach slab. Modification to end bent backwall and approach slab rest, adhesive anchors and reinforcing steel are to be accounted for in the replacement of the approach slab.

Standard Repair Notes:

A. Construct approach slab to match the grades and elevations of the proposed roadway.

B. Design and construct approach slabs in accordance with the SCDOT Bridge Drawings and Details, modified as necessary to attach to the existing end bent caps.

C. Flowable fill shall be placed in accordance with Section 210 of the Standard Specifications.

8.2 Approach Slab Repair

.

9. BARRIER RAIL/SIDEWALK RETROFIT

The existing Jersey Shape barrier is to be removed and replaced with barrier and sidewalk. See **Figure 1** for the proposed barrier and sidewalk dimensions and reinforcing.

10. LOAD RATING

Perform load capacity rating for the reconfigured bridge in accordance with the SCDOT Load Rating Guidance Document (LRGD), Load Rating Technical Notes, and the Manual for Bridge Evaluation, latest edition.

For bridge rehabilitation and retrofit work, update the existing load rating for the bridge and submit updated load rating package with the final bridge rehabilitation plans for QA review.

SCDOT will not accept a load rating which indicates the need for load posting.

11. FINAL FINISH OF EXPOSED CONCRETE SURFACES

Apply final surface finish to the following designated bridge areas:

A. Entire surface of all barrier rails, parapet walls, approach slab curbs, concrete utility supports, and wing walls; outside vertical edge of bridge deck slabs and sidewalks

B. Entire surface of all substructure units except top of bent caps and piers.

In addition to the requirements listed above, final finish requirements for all retained bridge components shall be in accordance with TP Section 700.4.1.2 and Section 702.3.12 of the SCDOT Standard Specifications.

Table 1: Required Bridge Rehabilitation

Bridge Information											
Asset ID	**Facility Carried**	**Feature Intersected**	**Year Built**	**Year Widened**	**Bridge Jacking**	**Deck Spall Repairs and Overlay [1]**	**Joint Replacement**	**Replace Bearings**	**Beam Rehabilitation**	**Substructure Spall Repair**	Barrier Rail/Sidewalk Retrofit
7937	S-40-31 (Bush River Rd.)	I-26	1985	N/A	**X[2]**	**X**	**X**	**X**	**X**	**X**	**X**

1. Type of deck repair (partial-depth overlay or full-depth replacement) is provided by SCDOT in Section 2 of this TPA.
2. Bridge jacking required only if needed to meet vertical clearance requirements in accordance with TP Section 200.3.5. If bridge is raised, replace approach slabs.

Table 2: Minimum Substructure Repairs

Bridge Information						
Asset ID	**Facility Carried**	**Feature Intersected**	**Year Built**	**Year Widened**	**Reinforced Concrete Crack Repair (LF)**	**Reinforced Concrete Spall Repair (SF)[1]**
7937	S-40-31 (Bush River Rd.	I-26	1985	N/A	20	25

1. Spall repairs do not include areas of end walls adjacent to bearings that may be spalled since end walls will be chipped as part of bearing replacement.

Table 3: Minimum Superstructure Repairs

Bridge Information					
Asset ID	**Facility Carried**	**Feature Intersected**	**Year Built**	**Year Widened**	**Painting of Structural Steel (SF)**
7937	S-40-31 (Bush River Rd.	I-26	1985	N/A	2200

Table 4: Top of Deck Repairs (Asset ID 7937: S-40-31 (Bush River Road) over I-26)

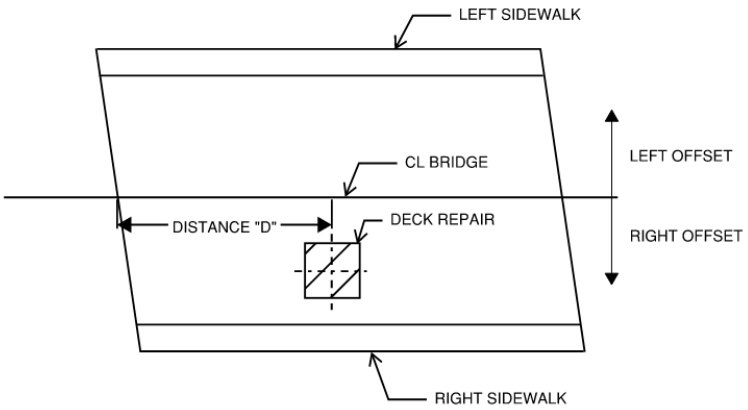

TOP OF DECK PLAN SCHEMATIC

Notes:

1. "D" taken from centerline of joint at the beginning of each span.
2. Direction of stationing is left to right.
3. Offset distances measured from centerline of bridge to center of repair area.
4. Quantities of concrete included in joint replacement are not presented in table.

Span Number	Repair Type	Distance "D" (FT)	Offset Direction	Offset Distance (FT)	Square Yardage (SY)	Crack Repair Length (FT)
1	Partial Depth	43.9	Left	14.8	363	-
1	Partial Depth	99.0	Right	18.9	47	-
1	Partial Depth	103.0	Right	5.4	145	-
2*	Partial Depth	0	Left	2.8	2	-
2*	Partial Depth	18.4	Right	12.1	2	-
2*	Partial Depth	33.7	Left	16.8	224	-
2	Partial Depth	97.5	Right	5.7	158	-
2*	Partial Depth	110.2	Right	24.1	481	-
3*	Partial Depth	8.7	Left	16.2	169	-
3*	Partial Depth	27.4	Right	31.6	46	-
3	Partial Depth	71.8	Right	34.6	2	-
3	Partial Depth	77.8	Right	6.1	136	-

3*	Partial Depth	89.8	Left	12.0	124	-
3*	Partial Depth	126.5	Left	20.5	2	-
3	Partial Depth	4.8	Left	13.5	2	-
3	Partial Depth	12.4	Left	20.8	2	-
3	Partial Depth	24.1	Right	24.7	417	-
3	Partial Depth	60.7	Left	16.7	110	-
3	Partial Depth	71.4	Right	6.7	132	-
3	Partial Depth	107.0	Left	11.8	39	-
3	Partial Depth	148.7	Right	22.9	4	-

* Quantity includes repairs in adjacent span (continuous deck).
Total square yardage of partial depth repair = 32,258 SF

APPENDIX A

Asset 7937 Bridge Deck Evaluation Report

APPENDIX B

Bush River Rd- Barrier-Sidewalk Retrofit

APPENDIX C

Bush River Rd- Bridge Typical Section